2102 Legacy

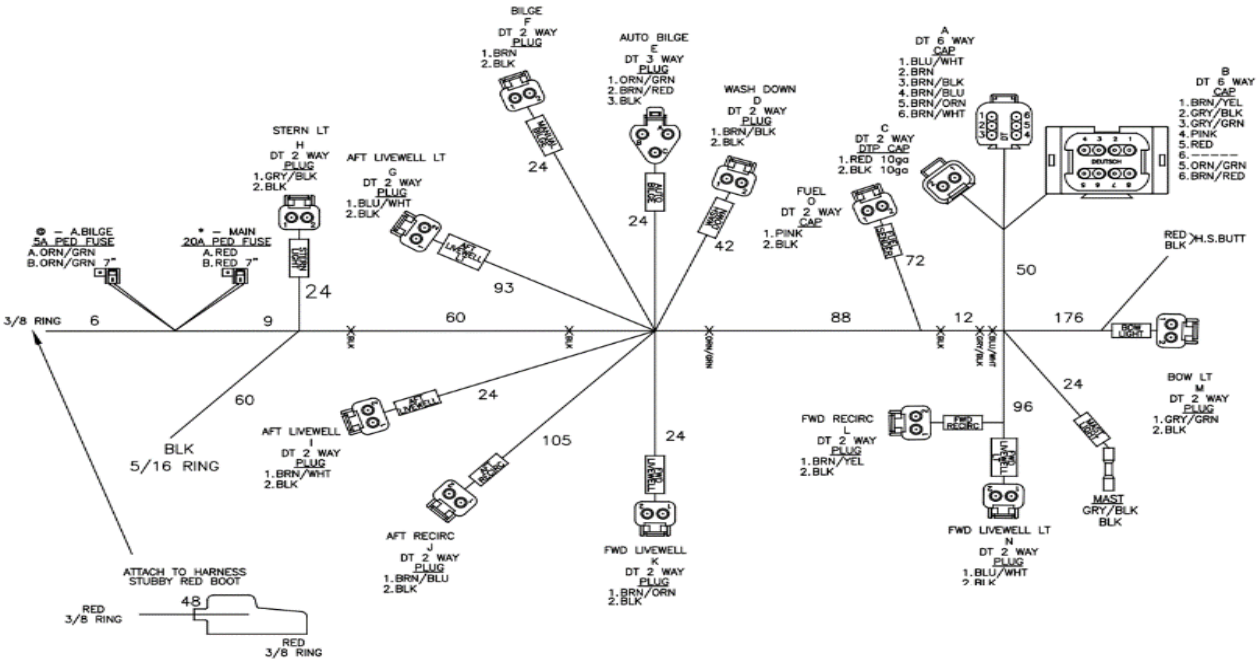
BILGE
F
DT 2 WAY
PLUG
1.BRN
2.BLK
AUTO BILGE
E
DT 3 WAY
PLUG
1.ORN/GRN
2.BRN/RED
3.BLK
WASH DOWN
D
DT 2 WAY
PLUG
1.BRN/BLK
2.BLK
A
DT 6 WAY
CAP
1.BLU/WHT
2.BRN
3.BRN/BLK
4.BRN/BLU
5.BRN/ORN
6.BRN/WHT
B
DT 6 WAY
CAP
1.BRN/YEL
2.GRY/BLK
3.GRY/GRN
4.PINK
5.RED
6.------
5.ORN/GRN
6.BRN/RED
STERN LT
H
DT 2 WAY
PLUG
1.GRY/BLK
2.BLK
AFT LIVEWELL LT
G
DT 2 WAY
PLUG
1.BLU/WHT
2.BLK
C
DT 2 WAY
DTP CAP
1.RED 10ga
2.BLK 10ga
FUEL
O
DT 2 WAY
CAP
1.PINK
2.BLK
@ – A.BILGE
5A PED FUSE
A.ORN/GRN
B.ORN/GRN 7"
* – MAIN
20A PED FUSE
A.RED
B.RED 7"
RED
BLK
H.S.BUTT
3/8 RING
BLK
5/16 RING
BOW LT
M
DT 2 WAY
PLUG
1.GRY/GRN
2.BLK
AFT LIVEWELL
I
DT 2 WAY
PLUG
1.BRN/WHT
2.BLK
FWD RECIRC
L
DT 2 WAY
PLUG
1.BRN/YEL
2.BLK
MAST
GRY/BLK
BLK
AFT RECIRC
J
DT 2 WAY
PLUG
1.BRN/BLU
2.BLK
FWD LIVEWELL
K
DT 2 WAY
PLUG
1.BRN/ORN
2.BLK
FWD LIVEWELL LT
N
DT 2 WAY
PLUG
1.BLU/WHT
2.BLK
ATTACH TO HARNESS
STUBBY RED BOOT
RED
3/8 RING
RED
3/8 RING

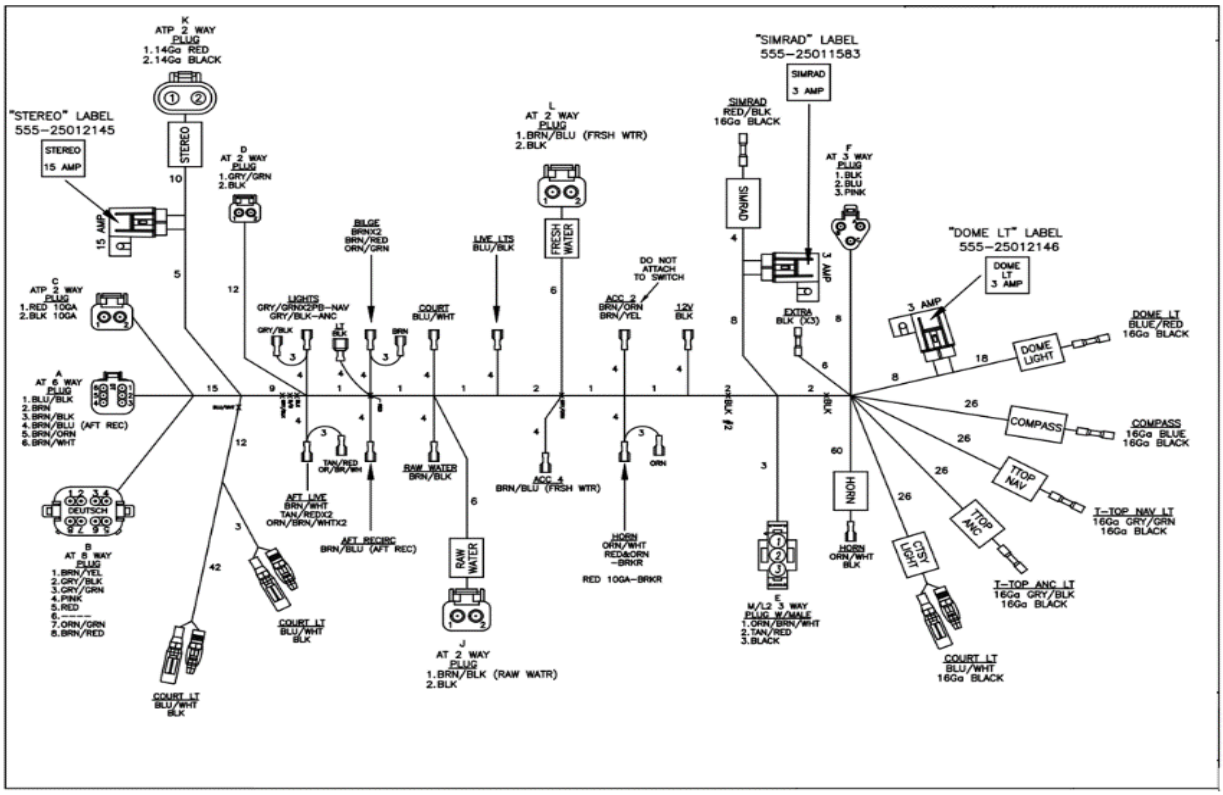
K
ATP 2 WAY
PLUG
1.14Ga RED
2.14Ga BLACK
"STEREO" LABEL
555-25012145
STEREO
15 AMP
D
AT 2 WAY
PLUG
1.GRY/GRN
2.BLK
C
ATP 2 WAY
PLUG
1.RED 10GA
2.BLK 10GA
A
AT 6 WAY
PLUG
1.BLU/BLK
2.BRN
3.BRN/BLK
4.BRN/BLU (AFT REC)
5.BRN/ORN
6.BRN/WHT
B
AT 8 WAY
PLUG
1.BRN/YEL
2.GRY/BLK
3.GRY/GRN
4.PINK
5.RED
6.------
7.ORN/GRN
8.BRN/RED
BILGE
BRNX2
BRN/RED
ORN/GRN
LIGHTS
GRY/GRNX2PB-NAV
GRY/BLK-ANC
COURT
BLU/WHT
LIVE LTS
BLU/BLK
L
AT 2 WAY
PLUG
1.BRN/BLU (FRSH WTR)
2.BLK
FRESH WATER
DO NOT
ATTACH
TO SWITCH
ACC 2
BRN/ORN
BRN/YEL
12V
BLK
SIMRAD
RED/BLK
16Ga BLACK
"SIMRAD" LABEL
555-25011583
SIMRAD
3 AMP
F
AT 3 WAY
PLUG
1.BLK
2.BLU
3.PINK
EXTRA
BLK (X3)
"DOME LT" LABEL
555-25012146
DOME
LT
3 AMP
DOME LIGHT
DOME LT
BLUE/RED
16Ga BLACK
COMPASS
COMPASS
16Ga BLUE
16Ga BLACK
TTOP
NAV
T-TOP NAV LT
16Ga GRY/ORN
16Ga BLACK
TTOP
ANC
T-TOP ANC LT
16Ga GRY/BLK
16Ga BLACK
CTSY
LIGHT
COURT LT
BLU/WHT
16Ga BLACK
HORN
HORN
ORN/WHT
BLK
AFT LIVE
BRN/WHT
TAN/REDX2
ORN/BRN/WHTX2
AFT RECIRC
BRN/BLU (AFT REC)
RAW WATER
BRN/BLK
RAW
WATER
J
AT 2 WAY
PLUG
1.BRN/BLK (RAW WATR)
2.BLK
ACC 4
BRN/BLU (FRSH WTR)
HORN
ORN/WHT
RED&ORN
-BRKR
RED 10GA-BRKR
M
AT 3 WAY
PLUG W/MALE
1.ORN/BRN/WHT
2.TAN/RED
3.BLACK
COURT LT
BLU/WHT
BLK
COURT LT
BLU/WHT
BLK

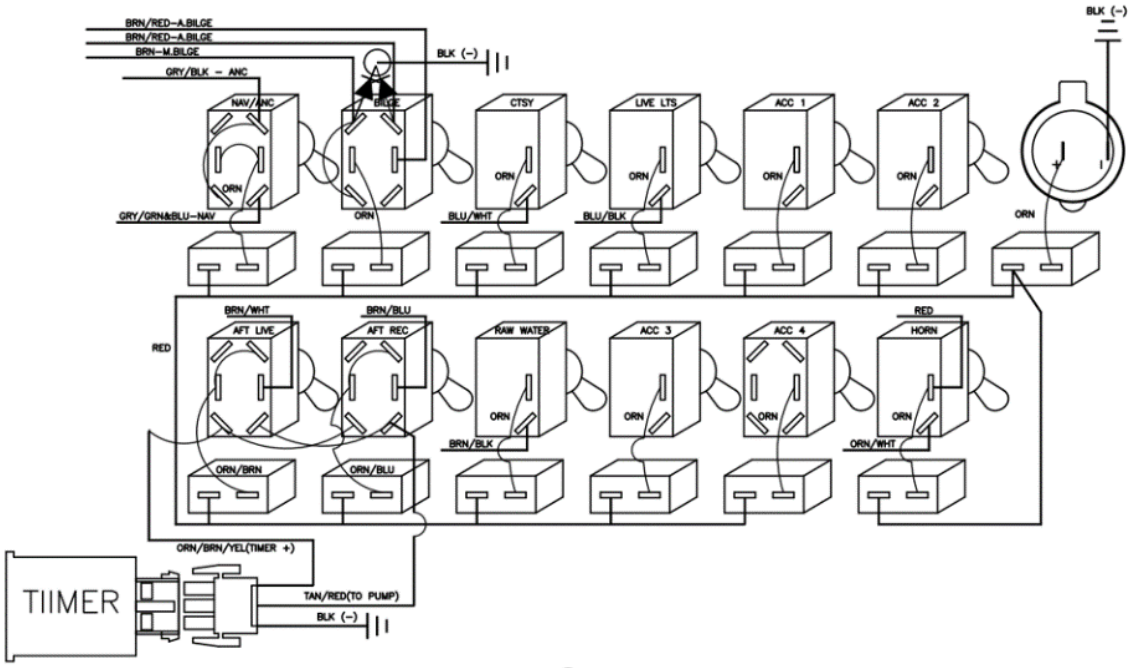
BRN/RED–A.BILGE
BRN/RED–A.BILGE
BRN–M.BILGE
GRY/BLK – ANC
BLK (–)
BLK (–)
NAV/ANC
BILGE
CTSY
LIVE LTS
ACC 1
ACC 2
ORN
GRY/GRN&BLU–NAV
BLU/WHT
BLU/BLK
BRN/WHT
BRN/BLU
RED
AFT LIVE
AFT REC
RAW WATER
ACC 3
ACC 4
HORN
BRN/BLK
ORN/WHT
ORN/BRN
ORN/BLU
ORN/BRN/YEL(TIMER +)
TIIMER
TAN/RED(TO PUMP)
BLK (–)